NOTES: (UNLESS OTHERWISE SPECIFIED)

1. SPECIFICATIONS AND DOCUMENTS:
   1.1. PANEL CONSTRUCTION SHALL BE IAW OH-SPEC-001, PANEL TYPE A, METHOD 1.
   1.2. ELECTRICAL CONNECTIONS SHALL BE IAW OH-INTERCONNECT.

2. ALL ITEMS NOT EXPLICITLY DEFINED IN THIS DRAWING ARE DEFINED BY THE MASTER CAD MODELS. ALL DIMENSIONS NOT DEFINED ON THIS DRAWING ARE CONTAINED WITHIN THE FOLLOWING MANUFACTURING FILES:
   2.1. FLAT PARTS: <MATERIAL>_<MATERIAL COLOR, IF APPLICABLE>_<THICKNESS, IN DECIMAL INCHES>_<PN>_<DESCRIPTION>_<REV>_V<VERSION NUMBER OF MODEL>.SVG
   2.2. FDM 3D PRINTED PARTS: FDM_<PN>_<DESCRIPTION>_<REV>_V<VERSION # OF MODEL>.3MF
   2.3. RESIN 3D PRINTED PARTS: RESN_<PN>_<DESCRIPTION>_<REV>_V<VERSION # OF MODEL>.3MF

REVISION HISTORY			
REV	DESCRIPTION	DATE	APPROVED
-	INITIAL RELEASE	9/23/2022	
A	ITEM 7 WAS: 100SP3T8B13M1QEH; IS: 100SP4T8B13M1QEH	4/12/2026	

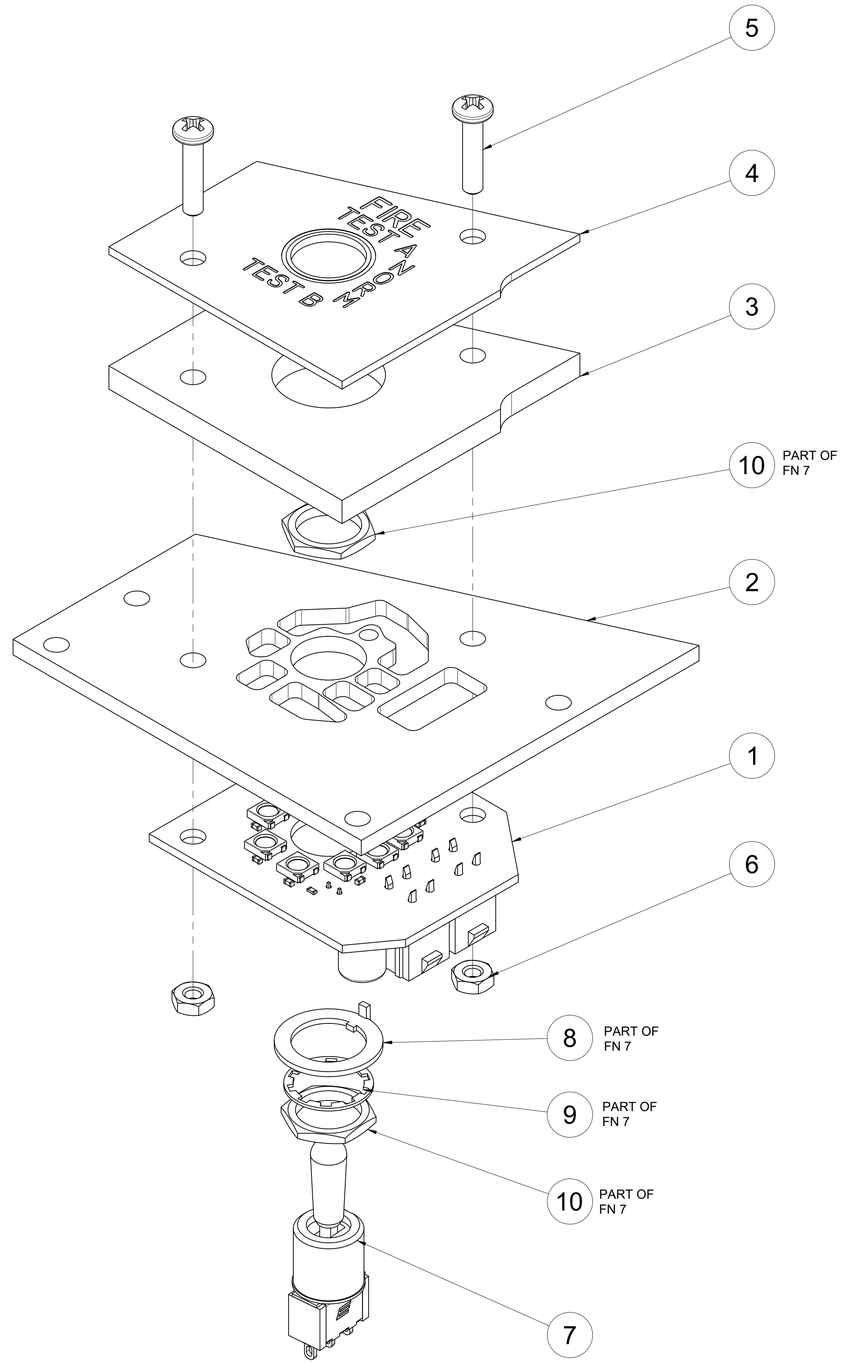

-1 ASSY
SCALE 2:1

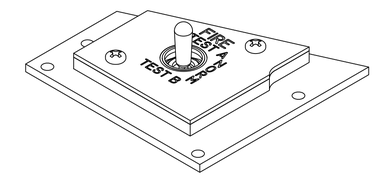

-1 ISO
SCALE 1:1

ITEM	QTY	PART NUMBER	DESCRIPTION	MATERIAL
10	2	HDW4	HEX NUT FOR SWITCH, 15/32-32NS	N/A
9	1	HDW12	LOCK WASHER FOR SWITCH, B13	N/A
8	1	HDW17	LOCKING RING FOR SWITCH, B13	N/A
7	1	100SP4T8B13M1QEH	SWITCH, TOGGLE, (ON)-OFF-(ON), SPDT, 18MM BAT	N/A
6	2	90760A007	NUT, JAM, #6-32, STEEL	STL
5	2	91249A151	PHS, #6-32 X .625, 18-8, BLK	SS
4	1	OH4A4A1-13	FIRE TEST PANEL LEGEND PLATE	RMRK
3	1	OH4A4A1-12	FIRE TEST PANEL LIGHTPLATE	ACRL
2	1	OH4A4A1-11	FIRE TEST PANEL BACKPLATE	ACRL
1	1	OH4A4A1-10	FIRE TEST PANEL PCB V2	N/A

PARTS LIST

UNLESS OTHERWISE SPECIFIED:

DIMENSIONS ARE IN INCHES.

DUAL DIMENSIONS ARE IN MILIMETERS AND ENCLOSED IN SQUARE BRACKETS.

INTERPRET DRAWING IAW ASME Y14.100-2017.

INTERPRET DIM AND TOL IAW ASME Y14.5-2009.

REMOVE ALL BURRS AND SHARP EDGES TO .05 MAX.

DIMENSIONS APPLY BEFORE FINISH.

UOS INCH TOLERANCES ARE:

DECIMALS:
.X ± .1
.XX ± .03
.XXX ± .010

ANGLES:
MACHINED ± .5°
LOCATING ± .5°
FORMED ± 2°
CHAMFERS ± 5°

DRILLED HOLE DIAMETERS:
.0135 - .125: +.004/-.001
.126 - .250: +.005/-.001
.251 - .500: +.006/-.001
.501 - .750: +.008/-.001
.751 - 1.000: +.010/-.001
1.001 - 2.000: +.012/-.001

OPEN HORNET
https://www.OpenHornet.com

TITLE
ASSY, FIRE TEST PANEL

LEFT CONSOLE

DESIGNED	J. STEENSEN	9/23/2022
CHECKED		
DRAWN	J. STEENSEN	9/23/2022

CC BY NC SA

SIZE D | DWG NO OH4A4A1-1 | REV A

SCALE 2:1 | SHEET 1/1